AM20E-C Series

20 watt dc-dc converters

- Power Modules for PCB Mounting
- Synchronous Rectifier Topology
- Surface Mount Technology
- Remote ON/OFF Control (Optional)
- Standard 2" x 1" Package and Pinout
- 2-Year Product Warranty

ELECTRICAL SPECIFICATIONS

Outputs	Input voltage (VDC)		Output voltage	Output current max.
	18...36V	36...75V		
Single output	AM20E-2402SC	AM20E-4802SC	2.5VDC	5000mA
	AM20E-2403SC	AM20E-4803SC	3.3VDC	4250mA
	AM20E-2405SC	AM20E-4805SC	5VDC	4000mA

Input	Input filter	π type
Output	Voltage accuracy	±2%
	Line regulation (HL-LL) (typ.)	±0.5%
	Load regulation (10-100%) (typ.)	±1%
	Ripple	<0.2% Vout +20mV max (Vp-p)
	Noise	<0.5% Vout +50mV max (Vp-p)
	Efficiency	85...88%
	Switching frequency	400kHz
Protection	Over current protection	Works over 120% of rating and recovers automatically
	Over voltage protection	Zener diode clamp Protection
	Short circuit protection	Current limit, auto-recovery
	Transient responce	<500 us (100% to 50% full load at ±1% error band)
Isolation	Voltage	1500 VDC
	Resistance	10^9 ohms
	Capacitance	1000 pF
Environment	Operating temperature	-25˚C…+71˚C
	Storage temperature	-55˚C…+105˚C
	Case temperature	+95˚C max.
	Temperature coefficient	±0.02% Per˚C
	Humidity	95% RH
	MTBF	>550,000 h @ 25˚C (MIL-HDBK-217F)
Physical	Dimension (L x W x H)	2.0 x 1.0 x 0.413 Inches (50.8 x 25.4 x 10.5 mm)
	Case Material	Nickel-Coated Copper with Non-conductive Base, six-side shielded.
	Weight	32 g
	Cooling method	Free-air convection

All specifications valid at nominal input voltage, full load and +25°C after warm-up time unless otherwise stated.

aimtec
2728 Daniel Johnson blvd., #202
Laval (Quebec) H7P 5Z7
Canada
tel.: 1-450-688-2722
fax: 1-450-687-2722
e-mail: info@aimtec.ca
http://www.aimtec.ca

MECHANICAL DIMENSION (Top View)

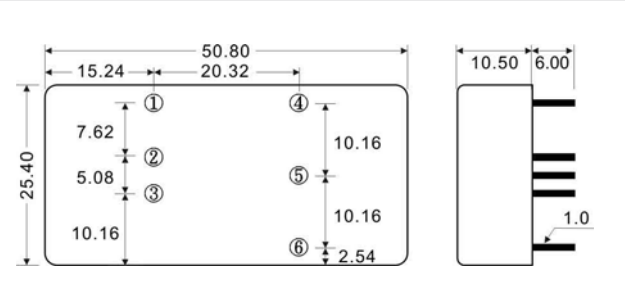

PIN#	Single
1	ON/OFF CTL (Optional)
2	-DC IN
3	+DC IN
4	-DC OUT
5	NO PIN
6	+DC OUT

DERATING

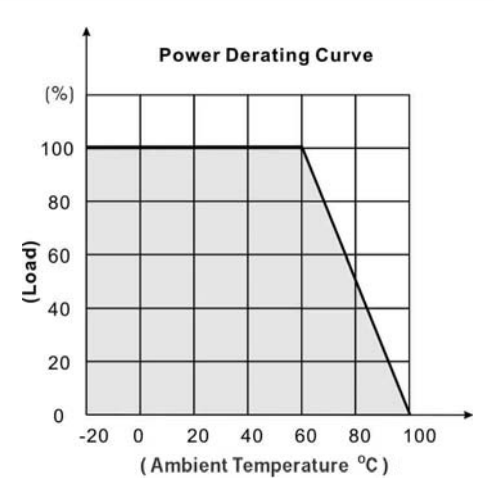

BLOCK DIAGRAM

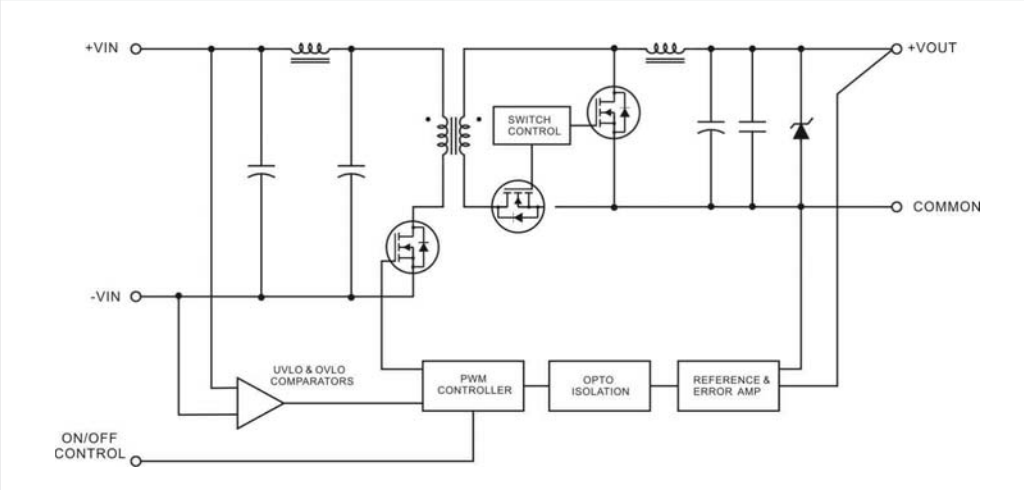

2728 Daniel Johnson blvd., #202
Laval (Quebec) H7P 5Z7
Canada
tel.: 1-450-688-2722
fax: 1-450-687-2722
e-mail: info@aimtec.ca
http://www.aimtec.ca