AM40K-C Series

40 watt dc-dc converters

- Power Modules for PCB Mounting
- Six-sided Continuous Shield
- High Efficiency
- Standard Package
- 2-Year Product Warranty

ELECTRICAL SPECIFICATIONS

Model No.	AM40K-4801SC	AM40K-4802SC	AM40K-4803SC	AM40K-4805SC	AM40K-4812SC	AM40K-4815SC	AM40K-4824SC
Max. output wattage (W)	14.4W	20W	26.4W	40W	40W	40W	40W
Input voltage (V.DC.)	48V (36-75V)	48V (36-75V)	48V (36-75V)	48V (36-75V)	48V (36-75V)	48V (36-75V)	48V (36-75V)
Output voltage (V.DC.)	1.8V / 8000mA	2.5V / 8000mA	3.3V / 8000mA	5V / 8000mA	12V / 3330mA	15V / 2660mA	24V / 1660mA
Efficiency (%)	80%	83%	85%	87%	87%	88%	89%

	Model No. (Single Output)	AM40K-4801SC	AM40K-4802SC	AM40K-4803SC	AM40K-4805SC	AM40K-4812SC	AM40K-4815SC	AM40K-4824SC
	Max output wattage (W)	40W	40W	40W	40W	40W	40W	40W
Input	Input filter	π type						
Output	Voltage (V.DC.)	1.8	2.5	3.3	5	12	15	24
	Voltage accuracy	±2%						
	Current (mA) max	8000	8000	8000	8000	3330	2660	1660
	Line regulation (HL-LL) (typ.)	±0.5%						
	Load regulation (10-100%) (typ.)	±1%						
	Ripple	<0.2% Vout +20mV max (Vp-p)						
	Noise	<0.5% Vout +50mV max (Vp-p)						
	Switching frequency	400kHz						
Protection	Over current protection	Works over 120% of rating and recovers automatically.						
	Over voltage protection	Zener diode clamp						
	Short circuit protection	Hiccup, auto-recovery						
Isolation	Voltage	1500 VDC.						
	Resistance	10^9 ohms						
	Capacitance	1000 pF						
Environment	Operating temperature	-25˚C…+71˚C						
	Storage temperature	-55˚C…+105˚C						
	Case temperature	+95˚C max.						
	Temperature coefficient	±0.02% Per˚C						
	Humidity	95% RH						
	MTBF	>550,000 h @ 25˚C (MIL-HDBK-217F)						
Physical	Dimension (L x W x H)	2 x 1.6 x 0.42 Inches (50.0 x 40.0x 10.67 mm)						
	Case Material	Nickel-Coated Copper with Non-Conductive base, six-side shielded.						
	Weight	58 g						
	Cooling method	Free-air convection						

All specifications valid at nominal input voltage, full load and +25°C after warm-up time unless otherwise stated.

aimtec
2728 Daniel Johnson blvd., #202
Laval (Quebec) H7P 5Z7
Canada
tel.: 1-450-688-2722
fax: 1-450-687-2722
e-mail: info@aimtec.ca
http://www.aimtec.ca

MECHANICAL DIMENSION (Top View)

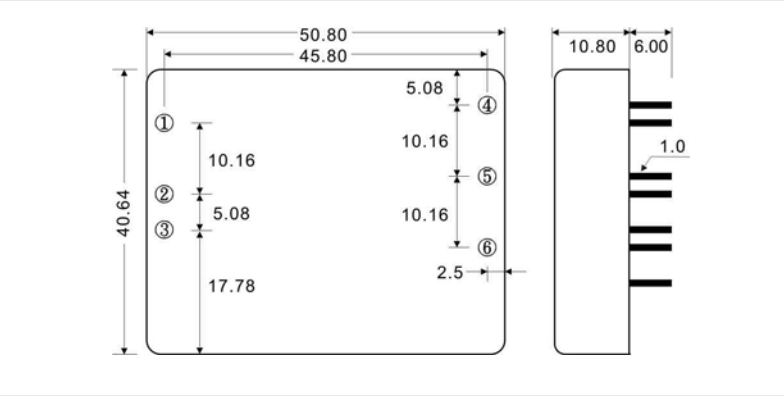

PIN#	Single
1	ON / OFF
2	-DC IN
3	+DC IN
4	TRIM
5	-DC OUT
6	+DC OUT

DERATING

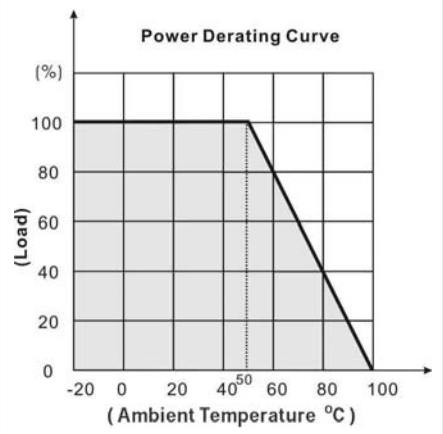

REMOTE ON/OFF CONTROL

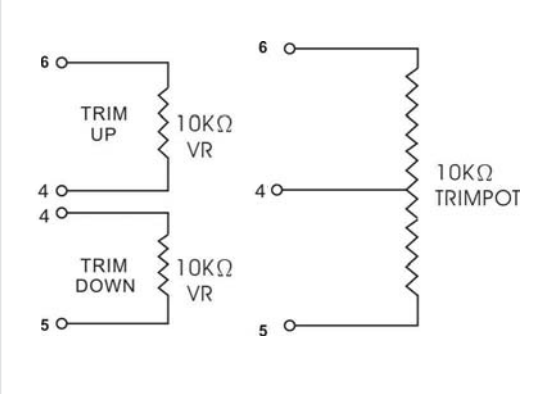

BLOCK DIAGRAM

Output Voltage (V.DC) : 1.8V, 2.5V, 3.3V, 5V

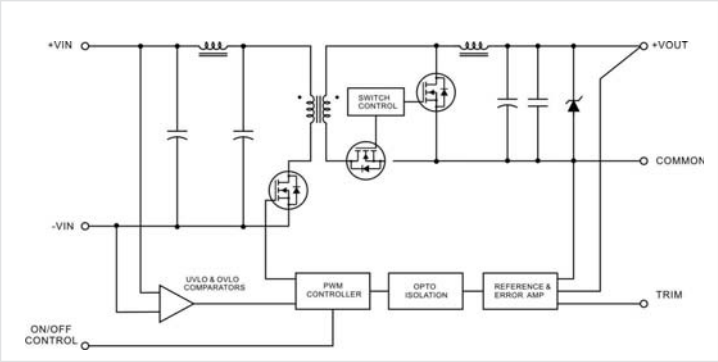

Output Voltage (V.DC) : 12V, 15V, 24V

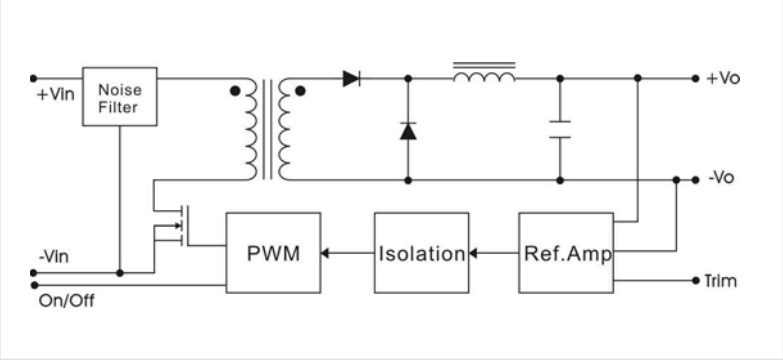

2728 Daniel Johnson blvd., #202
Laval (Quebec) H7P 5Z7
Canada
tel.: 1-450-688-2722
fax: 1-450-687-2722
e-mail: info@aimtec.ca
http://www.aimtec.ca